MAPLETREE

AUDIO DESIGN

Super Stealth
Monobloc Power Amplifier

Special Edition

Users' Manual

Rev. Oct. 24/12

Mapletree Audio Design
Lloyd Peppard
R. R. 1, Seeley's Bay, Ontario, Canada, K0H 2N0
(613) 387-3830
info@mapletreeaudio.com
http://www.mapletreeaudio.com

© Copyright Lloyd Peppard 2002-12

Introduction

The Mapletree Audio Design *Super Stealth Special Edition* Monobloc Vacuum Tube Power Amplifier provides 8 W of clean output power within a compact chassis and offers a number of desirable features:

? ? The exclusive use of high quality new old stock (NOS) or current production tubes that can be obtained at modest cost from many suppliers.

? ? Class AB Ultra-Linear push-pull beam power tetrodes delivering 8 Watts output power at low distortion.

? ? Wide frequency response: 20 Hz – 20 kHz –1 dB at full power output.

? ? DC Balance and Bias adjustments for lowest distortion even with unmatched output tubes.

? ? DC heater power supply for low noise, with switch for 12.6 or 6.3 V driver tubes.

? ? The exclusive use of polypropylene film signal capacitors and *Nichicon Muse* high performance electrolytic cathode bypass capacitors.

? ? Cathode type rectifier tube for soft startup, prolonging tube and capacitor lifetime.

Adjustments

Level control (optional) – The sensitivity of the *Super Stealth* is 0.45 V to produce full power output. For some high-output preamps, it may be advantageous to reduce the input level in order to shift the preamp volume control nearer the mid-position for normal listening. The *Super Stealths* can also be used without a preamp, directly from a source (e.g. CD player) using the level control for volume adjustment.

Heater voltage – The switch located adjacent to the two driver tubes can be set for use of 6SJ7 + 6SL7 tubes or 12SJ7 + 6SL7 tubes. It has no effect on the heater voltage of the 6V6 tubes.

DC Balance adjustment – With the dc voltage between the two red test jacks monitored on a 2 VDC meter scale, the DC Balance control is adjusted to produce a reading of close to 0 VDC. It is also possible to measure the plate voltages of the 6V6 tubes by connecting a meter between each red test jack and the black speaker binding post. Use a meter scale of at least 400 VDC. Refer to the schematic diagram for target voltages.

Bias Adjustment – The design value of total plate and screen current for the two 6V6 output tubes is 70 mA. The Bias control should be adjusted to produce a meter reading of 7.5 VDC (across 100 Ohms) between the two green test jacks. If you are using an analog meter, the red meter lead should be inserted in the green jack nearest the front of the chassis in order to obtain a positive reading. After adjusting DC balance, it may be necessary to re-adjust the bias for lowest distortion.

Speaker impedance – The standard wiring is for an 8 Ohm loudspeaker. If 4 or 16 Ohm outputs are required, the wiring will need to be changed under the chassis. The diagram below shows the connections to be made.

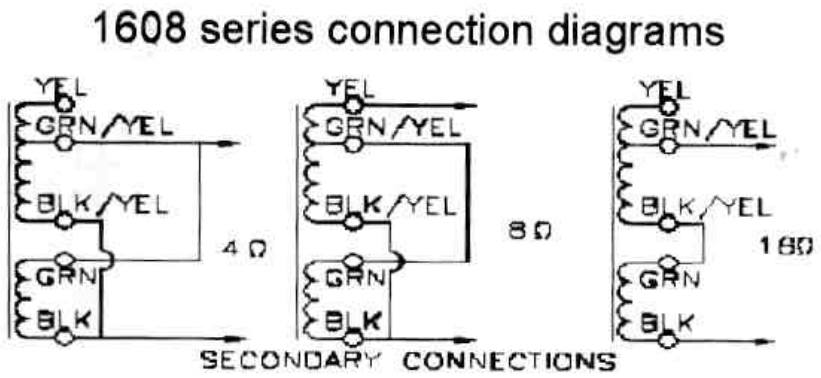

Specifications

Tube complement: 1 x 6/12SJ7, 1 x 6/12SL7GT, 2 x 6V6/6V6GTGT and 1 x 5AR4GT

Output configuration: Class AB_1 ultra-linear push-pull with self bias (6V6GT matched pair recommended)

Phase inverter: cathode-coupled

Heater supply: dc heater voltage for all tubes

Rated power output (8?): 8 W

Frequency response at 2 W output: 20 Hz–20 kHz –0.5 dB

Frequency response at 5 W output: 20 Hz–30 kHz –1 dB

Gain: 25 dB (17.8) or 0.45 V input for 8 W output

Input resistance: 470 k? ????k? with level control)

Noise: less than 0.7 mV (81 dB below rated output)

Dimensions: 6"W x 11" D x 5" H overall (*SE* version is 9"W x 13" D x 6" H)

Weight: 10 lb

Power consumption: 65W, 115-125 VAC 50/60 Hz

Fuse: 3 A fast blow type rated at 250 V (located inside chassis)

Mapletree Audio Design *Super Stealth* Monobloc Power Amplifier Special Edition

© Copyright Lloyd Peppard 2004-12

Rev. Oct. 2612

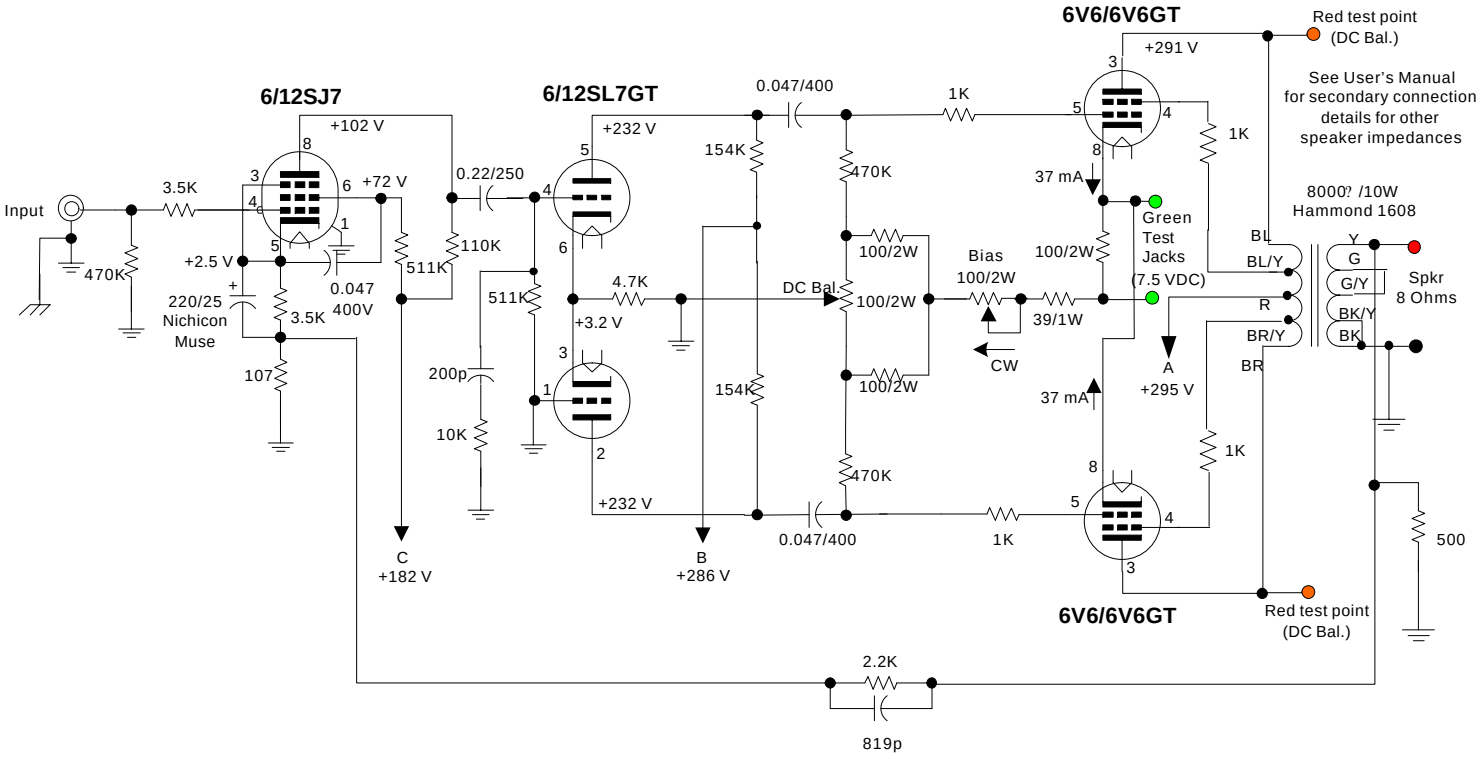

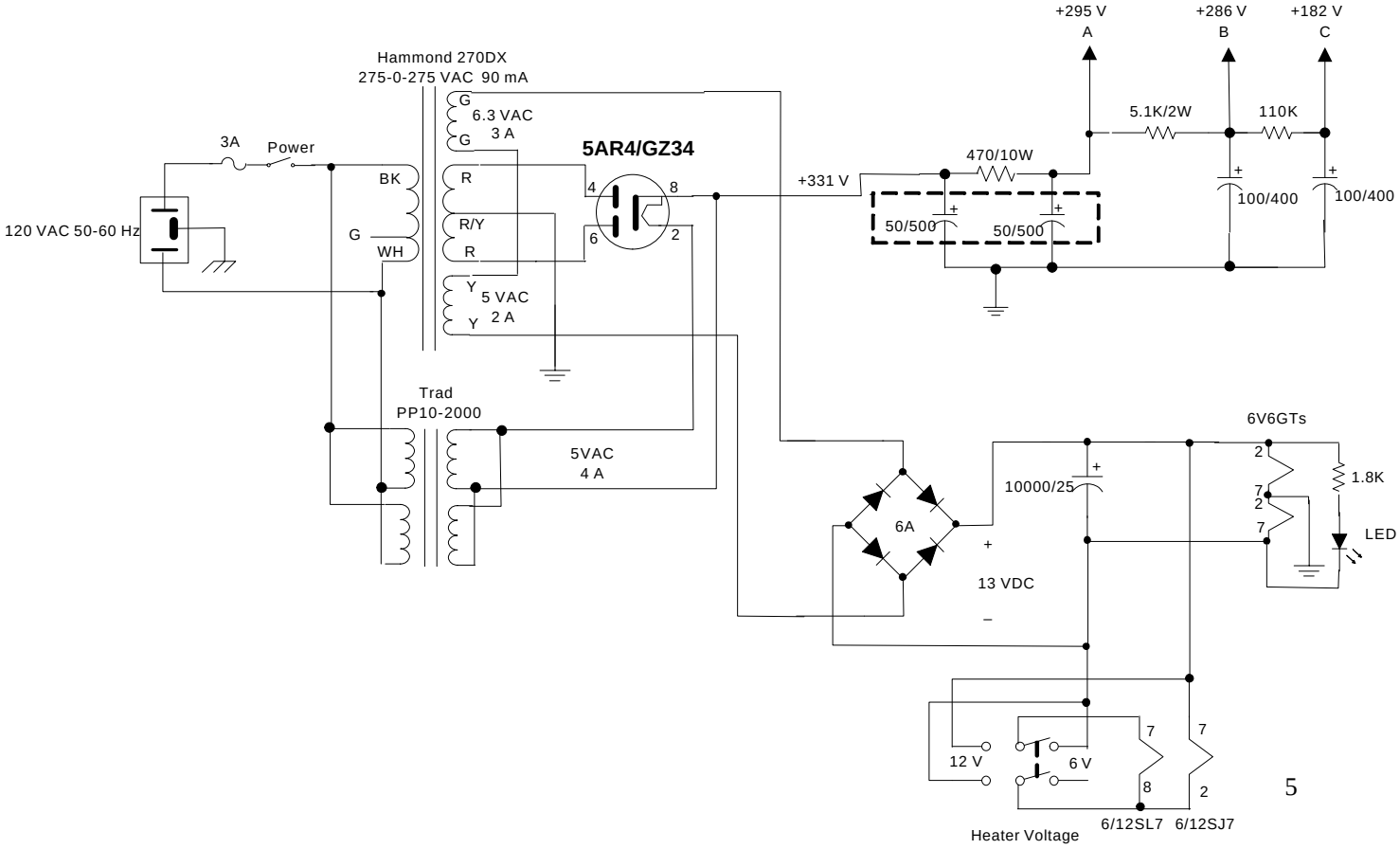

Tube substitutions

The Russian-made 6V6GT output tubes supplied are an excellent sounding, high-reliability design, replaceable at modest cost. However, users may wish to substitute NOS (new old stock) versions from a variety of manufacturers made over the past 70 years. The metal 6V6 is also a possible substitute and may offer a different sonic character than the glass versions. Matched pairs are recommended but not necessary if the dc balance is adjusted accordingly.

The 6/12SJ7 is a pentode developed for audio and low frequency RF circuits and exhibits very low noise. It rivals the EF86 in most respects. It is also available in glass as the 6/12SJ7GT. The metal "special red" 5693 is a premium substitute for the 6SJ7.

The 6/12SL7GT is a high gain dual triode well suited to the phase splitter role in the *Super Stealth*. The "special red" 5692 is a substitute for the 6SL7GT. The 6SU7GT is also a substitute for the 6SL7GT and offers matched triode sections, although this is not a requirement of the circuit used.
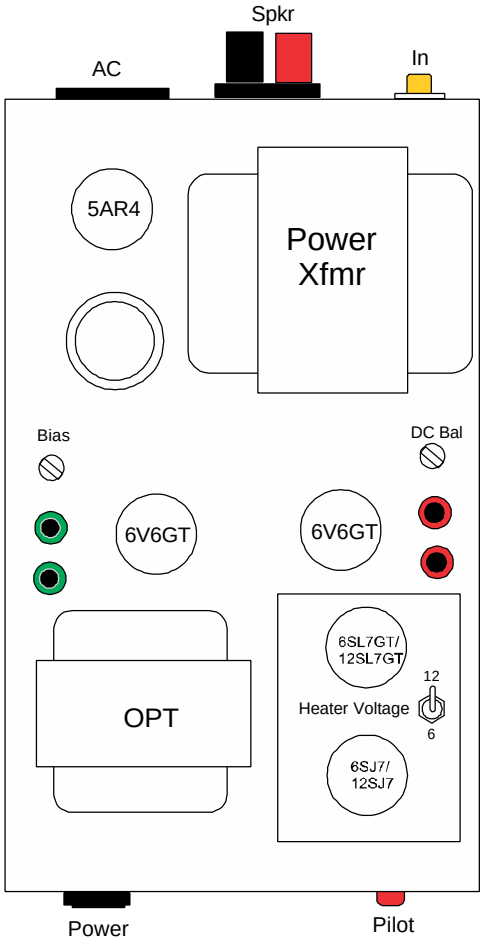
The 5AR$/GZ34 rectifier tube is a cathode type that offers a soft startup. Other compatible cathode types include the 5V4/5V4G/GT and the 5Z4. You can also use directly heated types such as the 5Y3GT and 5U4G/GT with loss of the soft startup feature and a reduction in supply voltage (which reduces the output power and may increase distortion).